ECMO in Acute Heart Failure

יום עיון משולב
טיפול נמרץ ואי ספיקת לב

Yigal Kassif

16/09/2022

Sheba Medical Center
Tel HaShomer
ISRAEL'S CITY OF HEALTH

The Leviev Heart Center

ECMO ?

טיפול תומך חיים במצבי כשל קיצוני של הראות, הלב או שניהם

המטרה

- תיקון ערכי הגזים בדם, הורדת לקטט
- מנוחה והתאוששות, פרפוזיה רקמתית

<< החייאה מטבולית

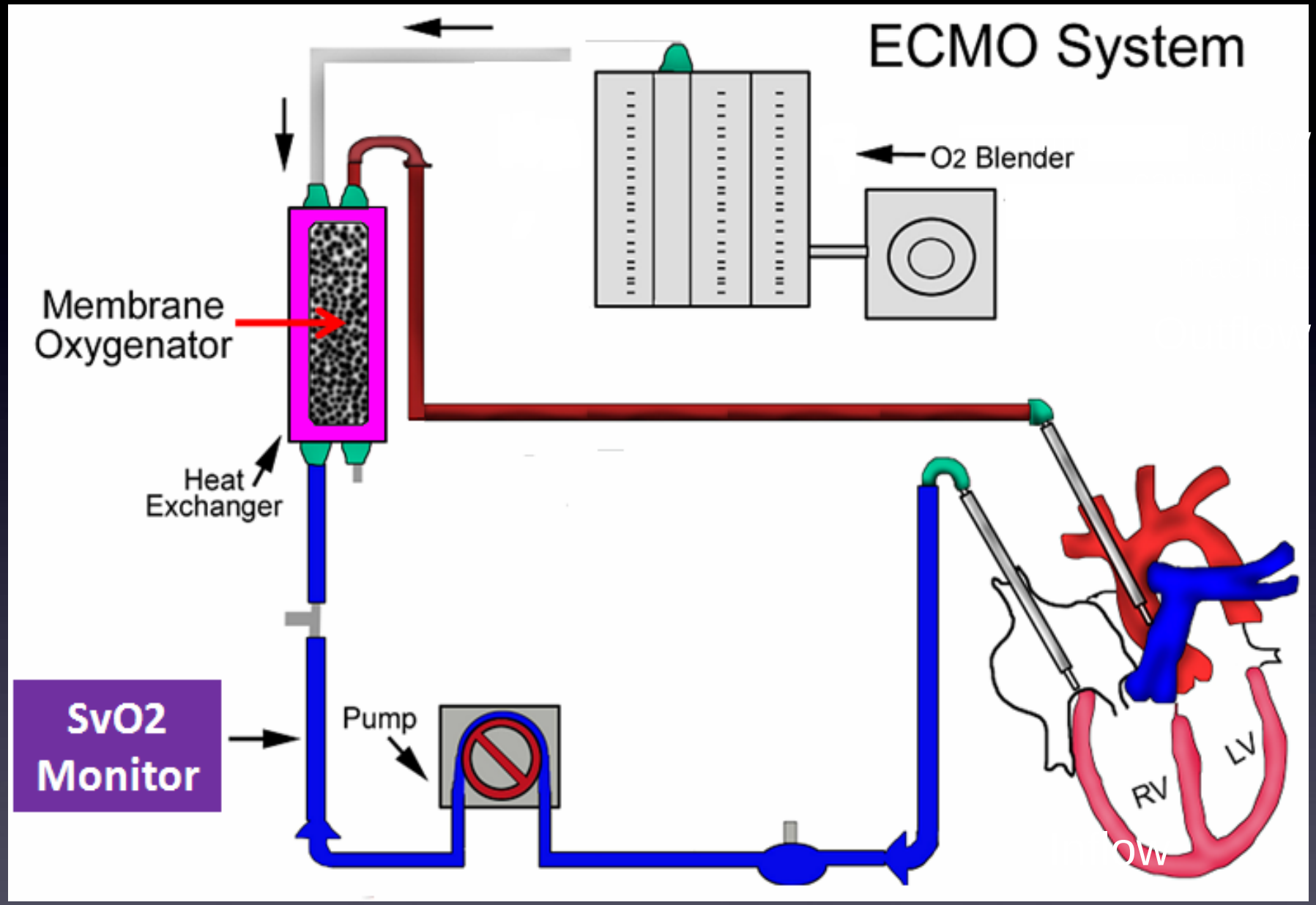
ECMO System
O2 Blender
Membrane Oxygenator
Heat Exchanger
SvO2 Monitor
Pump
RV
LV

Types of ECMO

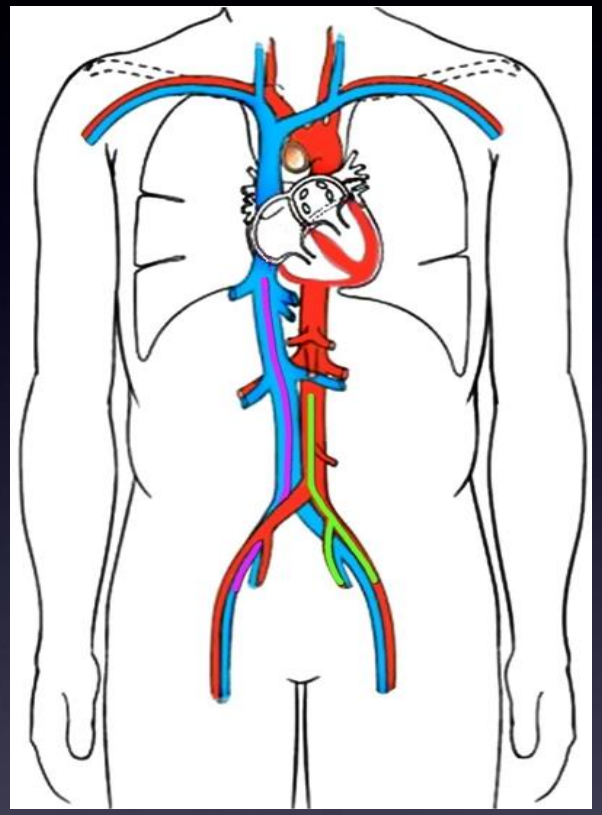

Veno-Arterial

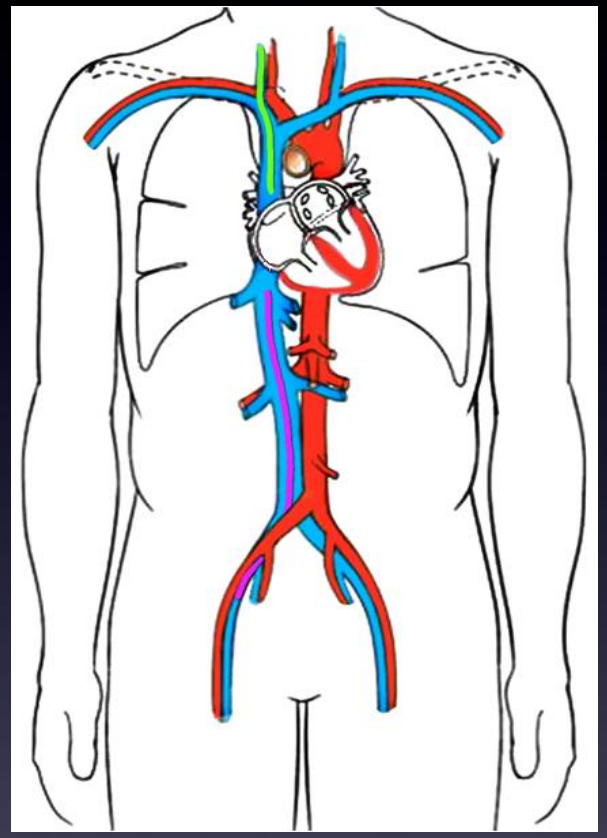

Veno-Venous

% שרדו לשחרור או העברה	% שרדו ECLS	הקבוצה
75	84	Neonatal respiratory
40	61	Neonatal Cardiac
39	64	Neonatal ECPR
57	66	Pediatric respiratory
49	65	Pediatric Cardiac
41	54	Pediatric ECPR
56	64	Adult respiratory
40	**55**	**Adult Cardiac**
28	**37**	**Adult ECPR**
60	72	Total

Acute Heart Failure - VA ECMO Candidates (Cardiogenic Shock)

Ischemic (MI)

Acute Decompensated HF

Myocarditis

Post-Partum

Post Cardiotomy

Massive Pulmonary Embolism

Intractable Arrhythmia

Toxins

Primary Transplant Graft Failure

Peri Procedural

% שרדו לשחרור או העברה	% שרדו ECLS	הקבוצה
75	84	Neonatal respiratory
40	61	Neonatal Cardiac
39	64	Neonatal ECPR
57	66	Pediatric respiratory
49	65	Pediatric Cardiac
41	54	Pediatric ECPR
56	64	Adult respiratory
40	55	Adult Cardiac
28	37	Adult ECPR
60	72	Total

Contraindications

Relative Contraindications

Uncontrollable Bleeding

Severe PVD

Aortic Dissection

Severe AI

Absolute C-I

Unwitnessed Asystole

Irrecoverable Condition

ECMO is a Bridge

Should we or shouldn't we?

- What is the end point?
  - Reasonable chance for recovery and weaning from ECMO
  - Possibility of transitioning to a long-term solution (Heart Transplantation (??), VAD, Impella >> VAD)
  - DNR

Timing

- Level of Shock / Organ Failure (Urine Output, LFT, Pul. Edema, Vasoconstriction, confusion…)
- Level of Inotropes (Stable High / Up-sloping..)
- Lactate, pH, PaO2…
- ECG – Ischemia, Arrythmia


AVIATION
BRIDGE

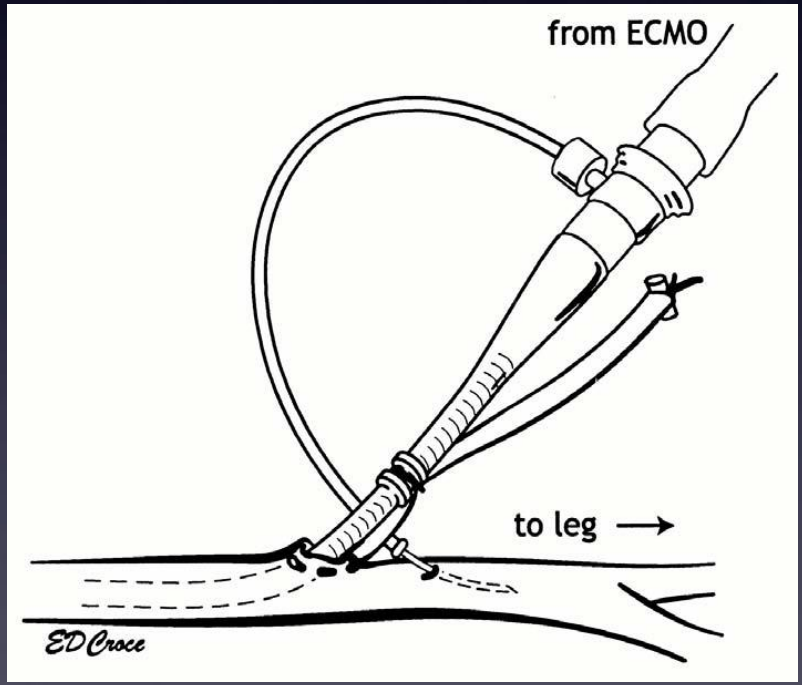
from ECMO
to leg
ED Croce

LV Vent

- **Empties left ventricle to prevent distension**
- Appical Vent
- Rt. Catheter > Septostomy > LV Vent
- Impella
- IABP
- Low Flow + Inotropes

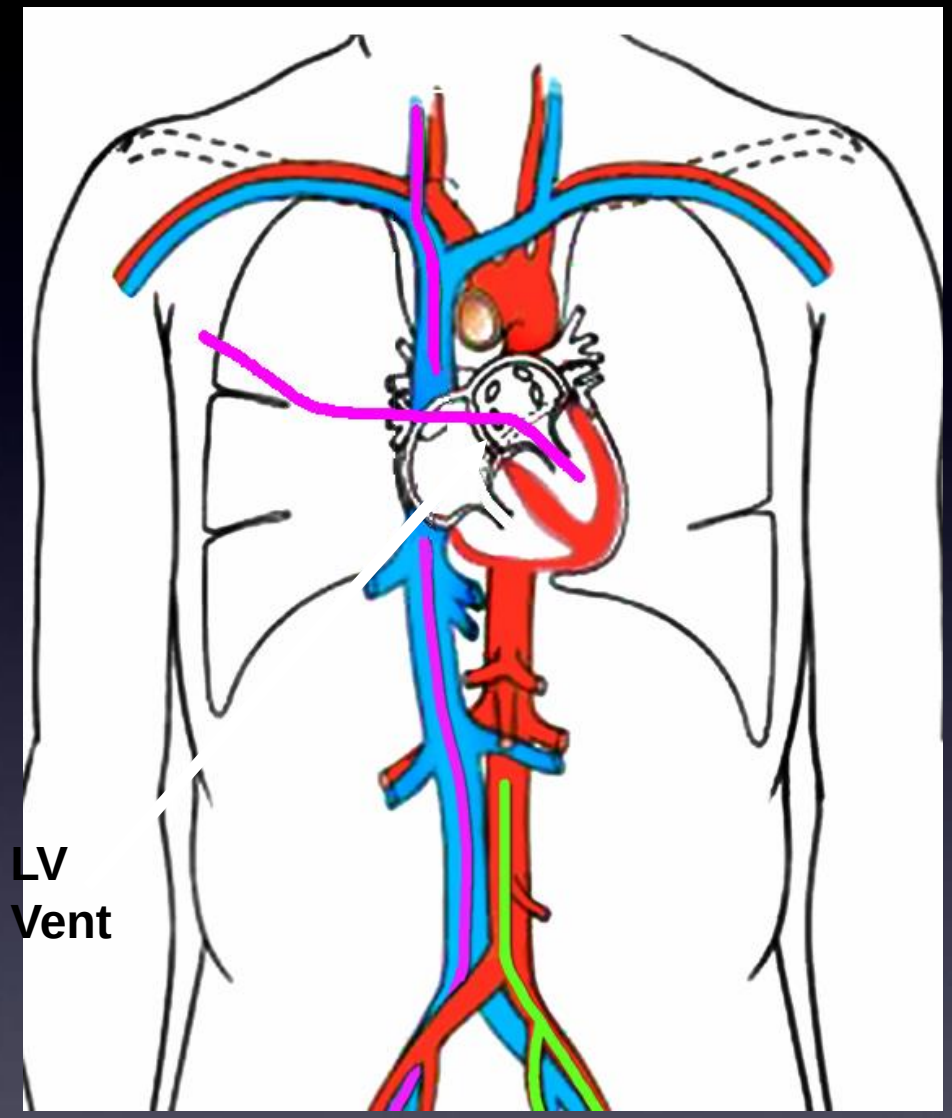

Circulation. 2019;140:2019–2037

December 10, 2019

IN DEPTH

Veno-Arterial Extracorporeal Membrane Oxygenation for Cardiogenic Shock

An Introduction for the Busy Clinician

Peter M. Eckman, MD
Jason N. Katz, MD, MHS
Aly El Banayosy, MD
Erin A. Bohula, MD, DPhil
Benjamin Sun, MD
Sean van Diepen, MD, MSc

Weaning from VA ECMO

Predictors for Post Weaning Mortality

- Door to ECMO – Shock / CPR Time
- Poor Renal / Liver Function
- Lactate ^^
- Ventilator Time

(= SOFA Score [=MOF Length & Depth])

* Age > 65y, EF , 25% 2 days post ECMO start

Weaning from VA ECMO

Step 1 : The **etiology** of cardiac failure must be compatible with myocardial recovery

Step 2 : **Hemodynamic stability** :
- The patient should have recovered a pulsatile arterial waveform for at least 24 hours
- Baseline MAP > 60 mmHg in the absence or with low doses catecholamine
- The patient should have recovered from major metabolic disturbances

Step 3 : **Pulmonary function** should not be severely impaired
If PaO2/FiO2 <100 mmHg when FiO2 of the ECMO gas flow is set at 21%, consider bridging the patient from VA- to VV-ECMO

Step 4 : The patient **must tolerate a full weaning** trial
** Hemodynamic and echocardiographic assessment whereas ECMO flow is gradually decreased to 66%, and to 33% of its baseline value and then to a minimum of 1–1.5*

If steps 1, 2, 3 and 4 are validated and the patient has under minimal ECMO support :
- LVEF of ≥ 20–25%, an aortic VTI of ≥ 12 cm and a TDSa ≥ 6 cm/s
- or CI > 2.4 liters/min/m2, PCWP < 18 mmHg and CVP < 18 mmHg

ECMO removal should be considered

אני ואתה.. נשנה את העולם!

יום 40 לסגר,
אני בסדר. תודה.

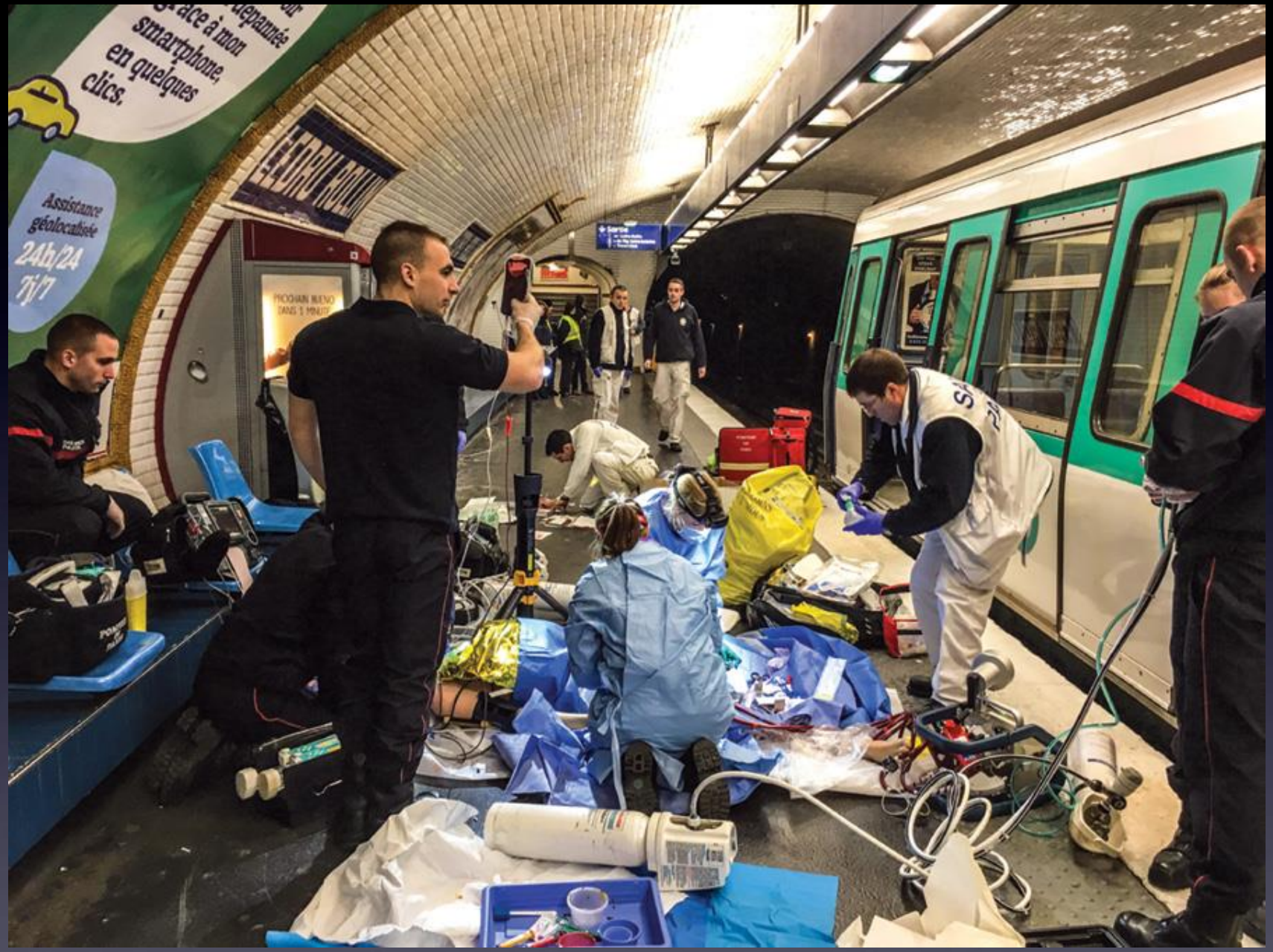
smartphone,
en quelques
clics.
Assistance
géolocalisée
24h/24
7j/7